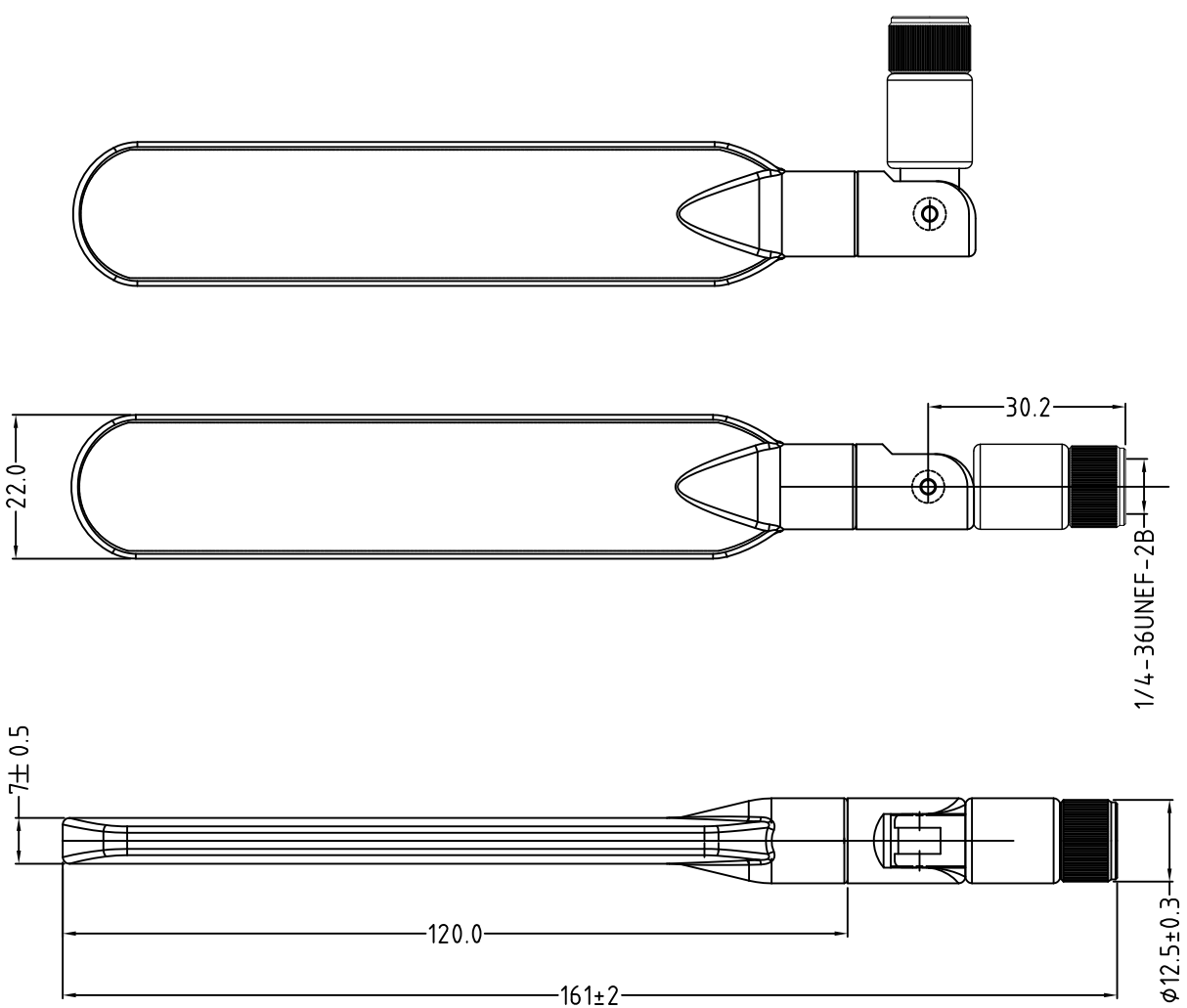

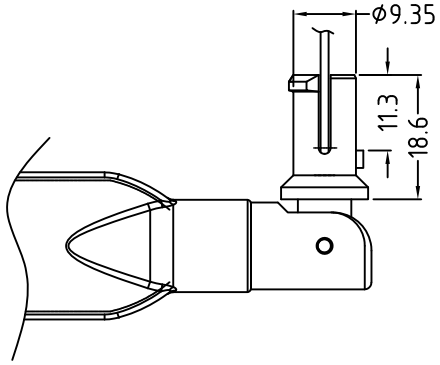

Electrical Properties	
Frequency Range	698~2700MHZ
Impedonce	50 Ω
V.S.W.R.	≤2.5
Radiation	Omni
Gain	3dbi
Polarization	Vertical
Mechanical Properties	
Whip	PC+ABS
Standard Connector	SMA(Male)
Weight	- g(est)
Operating Temp	−40°~ +80°

BOM

NO	Name	Material	Finish	QTY
1	Top	PC+ABS	BLACK	1
2	Bottom	PC+ABS	BLACK	1
3	RG 178 Coaxial cable	FEP	Brown	1
4	SMA Male	Brass	NI	1
5	SMA COVER	POM	BLACK	1
6	PCB Antenna	FR4	BLACK	1

THIRD ANGLE PROJECTION

Tolerance
.X ±0.1
.XX ±0.05
.x ±1°

DRAWED BY	li	MATERIAL:		PART NO:	D161.C1.0.999
CHECKED BY		FINISH:	BLACK	TITLE:	4G LTE Antenna
APPROVED BY	King	UNIT: mm			
DATE:	20.3.31	SCALE:1/1			

RUNSHUN
Dongguan Run Shun /www.rsantenna.com